4-digit Combination Laptop Lock MK816

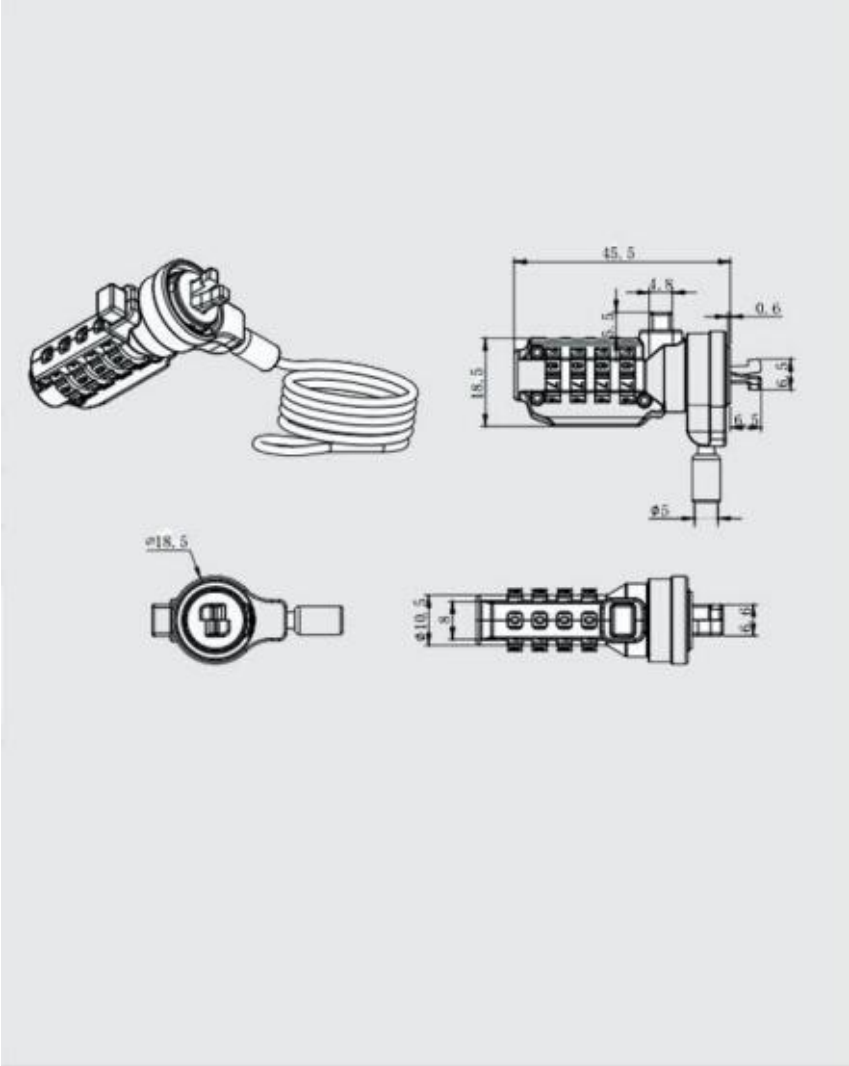

Material	Zinc alloy lock head, steel cable
Finished	Stain chrome lock, PVC coating cable
Key Combination	
Applications	Laptop, desktop, notebook, digital camera, printer, projector, etc.
Speciality	1. 4-digit resettable combination laptop lock. 2. With green nickel plated, RoHS compliance. 3. Easy-view window on combinations. 4. D3mm coiled cable, easy to carry. 5. Freedom of rotation with 360 degree. 6. Easy to install & use in the office or traveling.

Copyright © Xiamen Make Locks Manufacturer Co., Limited